Life Science

Heal Force

AlphaClean 1300

Vertical Laminar Flow Clean Benches

Heal Force leads you to healither life

What makes AlphaClean superior?

AlphaClean clean benches are ideal for a wide range of applications where sample protection is required.

Proven reliability
Outstanding safety is assured through a variety of core components and features to improve cleanliness

Outstanding comfort
With several thoughtful features, from the view screen to the work environment and ergonomic design

Energy Efficiency
From the motor controller to lighting , a new patent-pending innovations provide significant annual costsavings while maintaining superior performance

Ⓐ Blower
Automatically compensates for normal power line variation, air diruptiona and filter loading. Motor consumes less energy, reduce heat output and operates more quietly.

Ⓕ Prefilter
Chemically and thermally enhanced technology increase filtration capacity and efficiency,together with ergonomical filter change design for easy maintenence

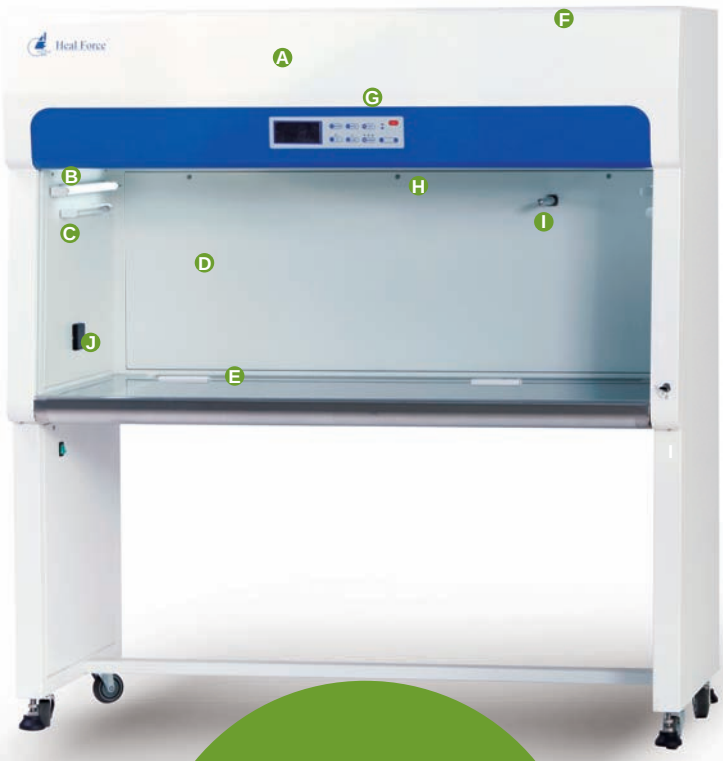

Ⓑ Illumination lamp
Illumination provides sufficient brightness to the working chamber.

Ⓒ UV lamp
Emission of 235.7 nanometers for most efficient decontamination. Automatic UV timer program saves your time during daily work

Ⓓ Satety grade glass
The front glass window provides protection from explosion and UV with more comfortable viewing

Ⓔ Work tops
Standard constructed of seamless, non-porous type 304 stainless steel

Ⓖ Friendly communication
Centered and angled down color-display for better at-a-glance viewing of safety and performance data.

Ⓗ Long life HEPA filter
Long life HEPA filter provides high separability for particles. Self-compensation for the clogging of filters and life span indicator optimize working condition and minimizes services

Ⓘ Real-time airflow monitoring
Velocity of airflow and temperature are inspected and indicated on control panel.Alert the user if airflow is insufficient

Ⓙ Universal electrical outlets
Two standard electrical duplex receptacles, with ground fault interruption and splash covers.

Certified performance
With an innovative front-access design, on-site validation, customer support packages, Maintenance is quicker and easier than ever before.

Innovation makes cleanliness all possible

Behind every great discovery, there is the technology that made it all possible.

Flow-SaFe

Laminar airflow over the working area takes containment to new levels, ensuring your safety

Smart and self-induced motor monitors and controls fan speed in real-time to maintain constant airflow during filter loading and temporary obstruction

Patented Flow-SaFe technology consumes less energy, reduces heat output and operates quietly

Lab-AleRt

Filter life indicator is designed to measure filter life span according to actual condition of membrane

Visual and acoustic alarm for indication of unsafe airflow conditions and window position

Interlocking safety mechanism is set between UV lamp and fluorescent light/front sash status.

Navi-Max

The colored LCD display offers an unprecedented level of viewing and operation experience

The intuitive interface delivers a constant read-out of working area temperature, air velocity/volume, filter life span, total running time

Easy-to-clean touchpad controls allow manual activation of blower, lamp, UV, electrical receptacles and menu selection

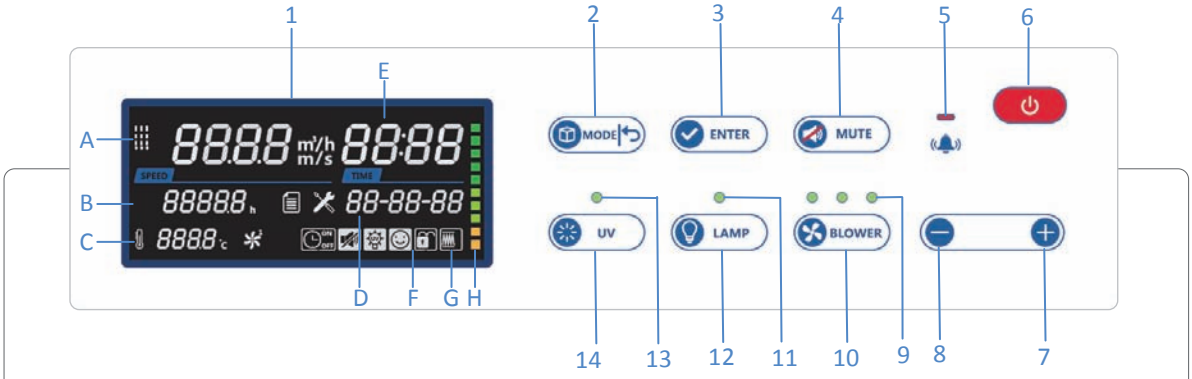

A.Downflow speed/volume
B.Filter working time
C.Temperature
D.Date or menu level
E.Time
F.System status
G.HEPA filter indicator
H.HEPA filter lifespan

1.LCD display
2.Mode/Return
3.Enter key
4.Mute key
5.Alarm indicator
6.Turn on/off key
7.Value change key
8.Value change key
9.Blower indicator
10.Blower key
11.Fluorescent indicator
12.Fluorescent key
13.UV indicator
14.UV key

Standards & Test

Standards Compliance	
Biosafety Cabinets	IEST-RP-CC002.2, Worldwide
Air Quality	ISO 14644.1, Class 5, worldwide
Filtration	EN-1822, Europe/ IEST-RP-CC001.3, Worldwide/ IEST-RP-007, Worldwide/ IEST-RP-CC034.1, Worldwide
Electrical Safety	EN61010-1, Europe/ IEC61010-1, Europe
Manufacturer Qualification	ISO 13485:2003, ISO 9001:2008

Comprehensive performance testing

Every AlphaClean unit manufactured by Heal Force is individually tested, documented by serial number and validated with the following test methods.

Air velocity profile

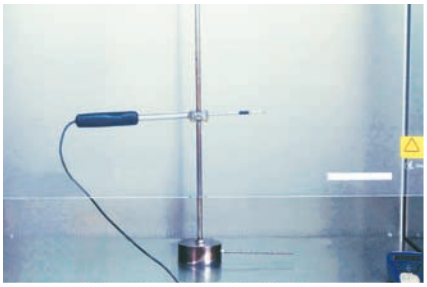

Non-viable particle counting

UV radiation test

Integrity testing of HEPA filters

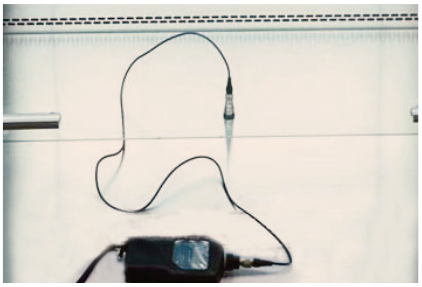

Vibration test

Illumination test

Air Velocity Profile	Verifies the hood is providing the proper air balance to protect the product from contamination
Integrity Testing of HEPA filters	Assures the existing HEPA filters are free of leaks and are properly sealed to prevent leakage or possible contamination to the work area
Non-Viable Particle Counting	Testing provided to verify clean bench is meeting designed air cleanliness classification level per ISO 14644 specifications
Viable / Microbial Air Testing	Assures Bioburden levels for bacteria and/or fungi are within acceptable parameters per the cabinet design or client specifications
Viable / Microbial Surface Testing	Assures Bioburden levels for bacteria and/or fungi are within acceptable parameters per cabinet design or client specifications
Airflow Visualization Profile	Verifies the hood is providing non-turbulent airflow to work area
Lighting Measurement	Verifies the lighting level is meeting the clean bench design level or worker comfort level
Sound Level Measurement	Verifies the sound level is not exceeding the clean bench design or worker comfort level
Temperature, Relative Humidity Measurements	Verifies the clean bench is operating within its design specifications

AlphaClean Vertical Laminar Flow Clean Bench Engineering Drawing – Front, Side

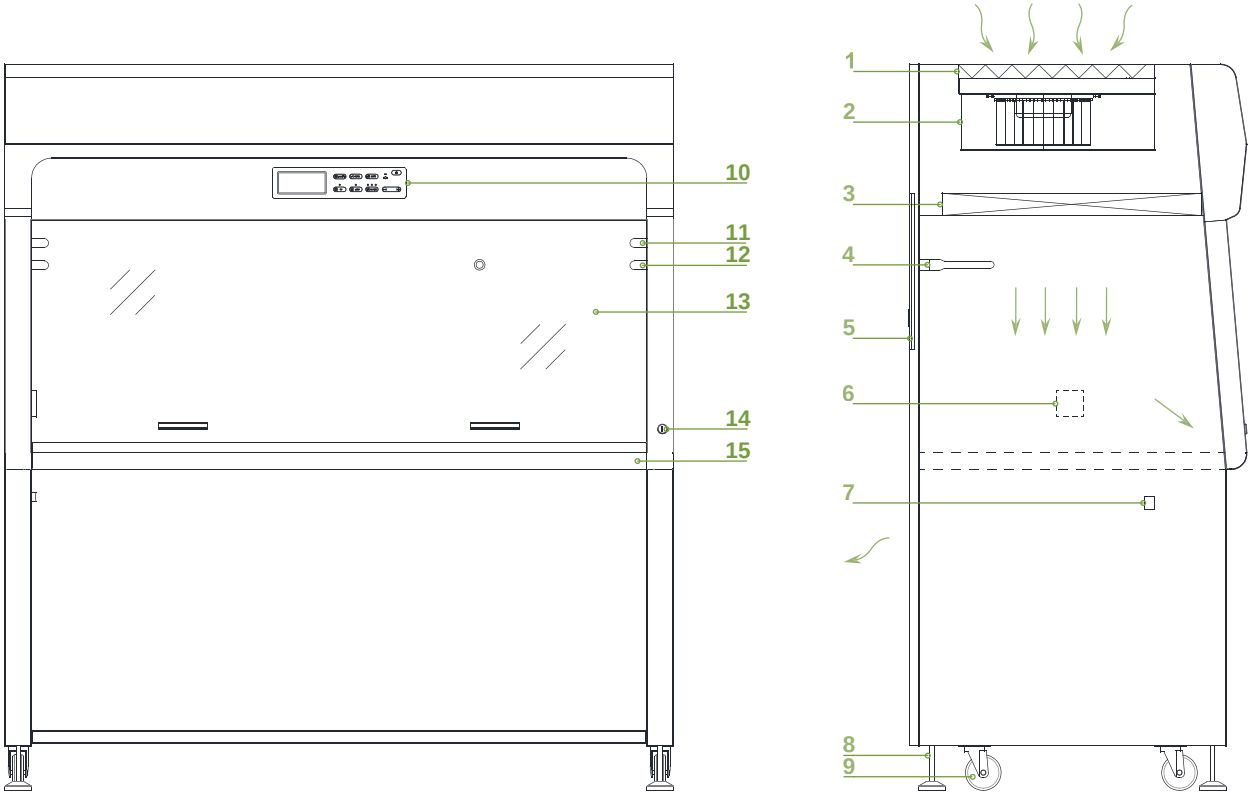

1.Pre-filter
2.Blower
3.Supply HEPA filter
4.Downflow sensor
5.Counterbalanced block
6.Water-proof electrical outlet
7.Main power switch
8.Adjustable Lever
9.Universal Wheel
10.Microprocessor control system
11.Fluorescent light
12.UV light
13.Toughened glass sliding door
14.Sash lock
15.Stainless steel single-piece work tray

AlphaClean Vertical Laminar Flow Clean Bench Engineering Drawing – Top

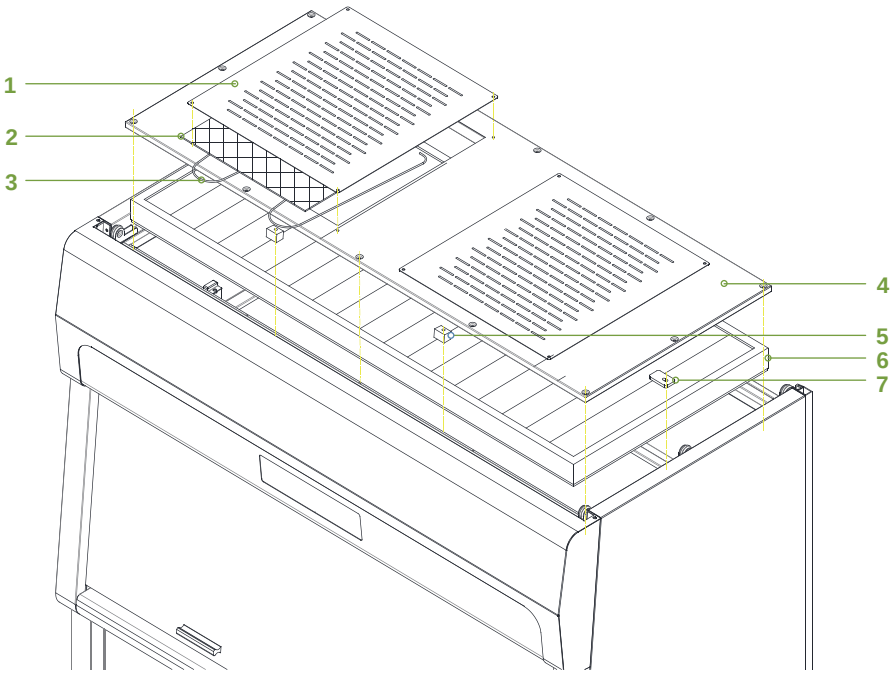

1.Pre-filter frame
2.Pre-filter
3.Mound layer
4.Upper cover
5.Pressure column
6.HEPA filter
7.Pressure block

General Specifications, AlphaClean Vertical Laminar Flow Clean Bench

Model	***AlphaClean 1300***
Nominal Size	1.3 meters
External Dimensions with Base Stand (W×D×H)	1500×760×1630mm
Internal Work Area, Dimensions (W×D×H)	1380×650×510mm
Internal WorkSpace (Area)	0.90M^2(9.69 sq.ft)
HEPA filter size (W×D×H)	1320×580×50mm
Prefilter size (W×D×H)	400*380*3mm (2PCs)
Airflow	
Vertical Velocity *	0.2~0.5m/s
Vertical Volume	m³/hr (cfm)
Supply Filter	
Type	HEPA
Material	Glass fibre fleece
Separability in MPPS	99.995%
Separability at 0.3um particle size	99.999%
Cleanliness in Work Area	ISO Class 3
No. of Sedimentated Bacteria Colony	≤0.5CFU*0.5h
Noise level	＜55dB
Fluorescent Light Intensity	>800lux
Excellent light distribution	Yes
Fluorescent Light Power and Number	30W,2PCs
UV Lamp Power and Number	15W,2PCs
RMS	≤5um
Cabinet Construction	
Main Body	1.2mm(0.05") steel with white oven-baked epoxy-polyester power-coated
Side Walls	1.2mm(0.05") steel with white oven-baked epoxy-polyester power-coated
Work Zone	1.5mm (0.06") stainless steel, grade 304
Window Material	Hardened/laminated safety glass
Working Temperature	10 ～ 30℃
Working Humidity	30 ～ 75%RH
Electrical (220-240V, 50/60Hz, 1 phase)	
Cabinet Full Load Amp(FLA)	2.5A
Optional Outlets FLA	3A
Cabinet Maximum Power	550VA
Cabinet Nominal Power	300VA
Power Supply*	
220V±10%/50Hz	Yes
220V±10%/60Hz	Yes
110V±10%/60Hz	Yes
Protection	
Protection class	I
Protection type	IP20
Overvoltage category	II
Contamination degree	2
Net Weight	185kg(408lbs)
Shipping Weight	250KG
Shipping Dimensions Maximum(W×D×H)	1600*840*1800mm
Shipping Volume, Maximum	

Specification are subject to change without notice * at initial setpoint with uniformity of better than +/-20% ** Please contact us for more optional power supply information